PERIODICALLY EMBEDDED MONITORING AND REPORTING SYSTEM

Jaimin Patel[1], Asst. Prof. Sugnesh D. Hirpara[2]
[1]Students, M.E. Semester IV, [2]Assistant Professor
E.C Department, Silver oak college of Engineering and Technology, Ahmedabad, Gujarat

Abstract: To detect the hardware faults in a system, the periodically embedded monitoring and reporting system has been introduced. Different hardware system or different electronics devices generally face both application as well as hardware faults. This application oriented formal reasoning is used to determine the problems in the computer system. The system asks questions to the user and the fact about the problem to detect the problems. Question appears on the computer display screen for the user, and the user responds by giving answers to those questions. It then searches appropriately through different paths for proper solution. It does so, without getting confused by large number of possibilities. This paper specifies an automated system which accepts the faults of any system and then it consults with monitoring and reporting to give required solution and rectification. It introduces many new technological changes that make the system capable to handle the data perfectly and efficiently.
Keywords: -Diagnosis, POST

I. INTRODUCTION

This reporting system is very important now a day. Many problems were created in a computer system. This system asks your computer problem and displays the perfect fault in a computer. Generally the controlling cabin and industrial plants are at some distance, so for an engineer its very time consuming to go for checking the error in a system. Hence we adapted this technique which shows error in system automatically in a cabin only. By this we can save time and cost both. If the necessary hardware is detected and found to be operating properly, the computer begins to boot. If the hardware is not detected or is found not to be operating properly, the BIOS issue an error messages which may be text on the display screen and a series of coded message, depending on the nature of the problem. Since system runs before the computers video card is activated, it may not be possible to progress to the display screen. For example, if the keyboard is not detected, a particular pattern of message will inform you of that fact. Since the hardware checked are absolutely for the computers functions.

II. THE HARDWARE SYSTEM

A. Raspberry Pi: The Raspberry Pi is a small computer about the size of a credit card. It was developed in the UK by the Raspberry Pi Foundation. A complex IC that integrates the major functional elements in to a single chip in Raspberry Pi[13] it is programmable processor, on-chip memory, accelerating function hardware (e.g. GPU) ,both hardware and software, analog components so benefit of the use as Raspberry pi Reduce overall system cost, Increase performance, Lower power consumption ,Reduce size of hardware. Raspberry Pi has two module available model A and Model B, B+. Raspberry Pi has Broadcom BCM2835 SoC Multimedia processor.

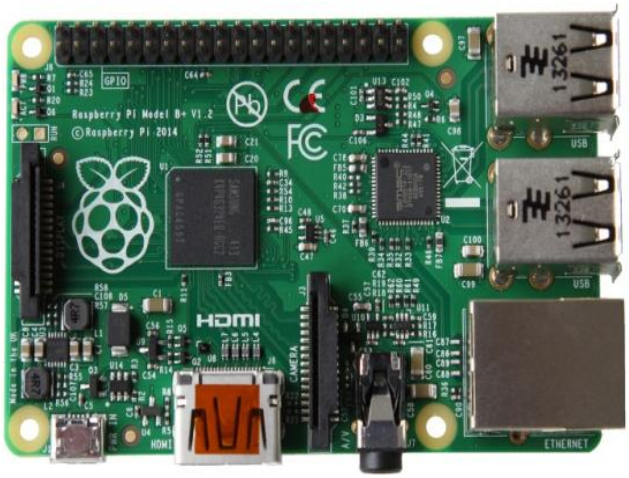

Fig.1: RASPBERRY PI

Developer is Raspberry Pi Foundation. It is Single-board computer Release in February 2012.Operating system Linux (Raspbian, Debian GNU/Linux, OpenELEC, Fedora, Arch Linux ARM, Gentoo), RISC OS, FreeBSD, NetBSD, Plan 9, Inferno, OpenWrt. Power 2.5W(model A),3.5 W (model B)3.0 W (model B+).The Raspberry Pi is based on the Broadcom BCM2835 system on a chip (SoC), which includes an ARM1176JZF-S 700 MHz processor, VideoCore IV PU,and was originally shipped with 256 megabytes of AM, later upgraded (Model B & Model B+) to 512 MB. The system has Secure Digital (SD) or MicroSD (Model A+ and B+) sockets for boot media and persistent storage.

B. Wi-Fi module: The Leoxsys wireless USB adapter LAN card offers a simple way of either adding or upgrading your wireless connectivity. It is especially meant to boost the connectivity on your desktop computer system or laptop. Unbelievably high-speed network access is what this USB wireless network adapter with external antenna promises to offer. If you connect it to a wireless 802.11n device, you can easily expect it to transmit data at a speed of up to 150Mbps. All you need to do to enjoy fast web access is plug the LeoxsysWiFi USB adapter LAN card into the USB port of your computer or notebook.

Fig. 2: Temperature Sensor

C. Real Time Clock (RTC): The Raspberry Pi is designed to be an ultra-low cost computer, so a lot of things we are used to on a computer have been left out. For example, your laptop and computer have a little coin-battery-powered 'Real Time Clock' (RTC) module, which keeps time even when the power is off, or the battery removed. To keep costs low and the size small, an RTC is not included with the Raspberry Pi. Instead, the Pi is intended to be connected to the Internet via Ethernet or Wi-Fi, updating the time automatically from the global ntp (network time protocol) servers For stand-alone projects with no network connection, you will not be able to keep the time when the power goes out. So in this project we will show you how to add a low cost battery-backed RTC to your Pi to keep time!

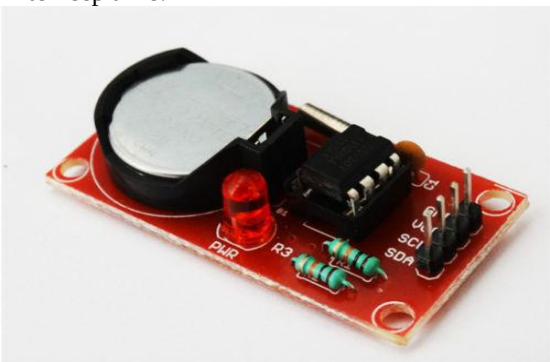

Fig. 3: RTC

D. USB Audio: The EM4102 (previously named H4102) is a CMOS integrated circuit for use in electronic Read Only RF Transponders. The circuit is powered by an external coil placed in an electromagnetic field, and gets its master Clock from the same field via one of the coil terminals. By turning on and off the modulation current, the chip will send back the 64 bits of information contained in a factor programmed memory array. The programming of the chip is performed by laser fusing of poly silicon links in order to store a unique code on each chip. The EM4102 has several metal options which are used to define the code type and data rate. Data rates of 64, 32and 16 periods of carrier frequency per data bit are available. Data can be coded as Manchester, Bi phase or PSK. Due to low power consumption of the logic core, no supply buffer capacitor is required. Only an external coil is needed to obtain the chip function. A parallel resonance capacitor of 78 pF is also integrated.

Fig. 4: USB Audio

III. DESIGN OF PROPOSEDHARDWARE SYSTEM

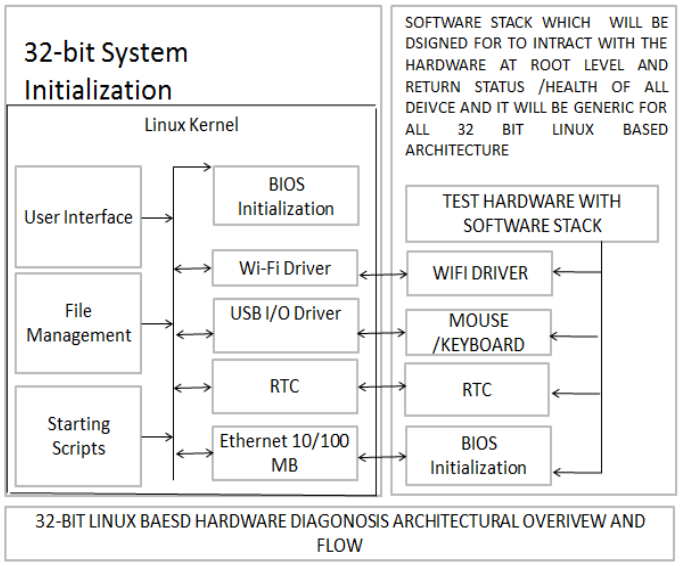

Fig.5: HARDWARE FLOW

This 32 bit Linux based board built in a port Wi-Fi, RTC, USB I/O, Ethernet, BIOS etc. That will checked system periodically and reporting the system. Test hardware with software stack on Linux kernel. When power is turned on, periodically check the ports and detect the faults of the computer's basic input/output system runs to determine if the computer hardware is working correctly or not. The Linux open source operating system, or Linux OS, is a freely distributable, cross-platform operating system based on Unix that can be installed on PCs, laptops, net books, mobile and tablet devices, video game consoles, servers, supercomputers and more. The Linux OS is frequently packaged as a Linux distribution [12] for both desktop and server use, and includes the Linux kernel (the core of the operating system) as well as supporting tools and libraries. Popular Linux OS distributions include Debian, Ubuntu, Fedora, RedHat and open SUSE.

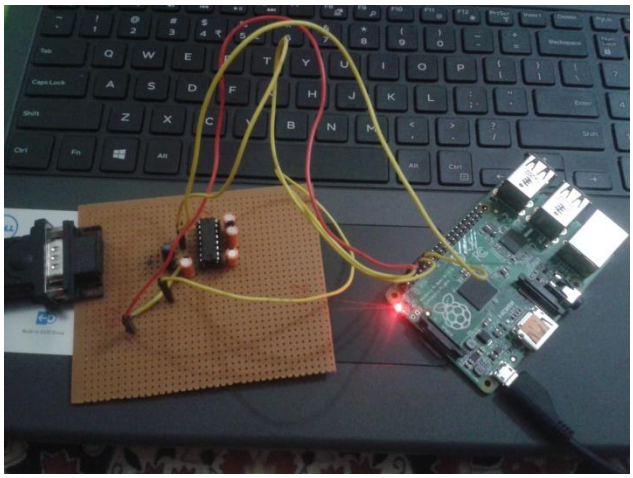

Fig.7:Connection of Raspberry pi with MAX 232

Raspberry Pi is connected to PC through RS-232 cable. We made use of MAX232 IC is used to convert the TTL/CMOS logic levels to RS232 logic levels during serial communication of ARM 11 processor with PC. The controller operates at TTL logic level (0-5V) whereas the serial communication in PC works on RS232 standards (-25 V to + 25V). This makes it difficult to establish a direct link between them to communicate with each other. The intermediate link is provided through MAX232. It is a dual driver/receiver that includes a capacitive voltage generator to supply RS232 voltage levels from a single 5V supply. Each receiver converts RS232 inputs to 5V TTL/CMOS levels. These receivers (R_1 & R_2) can accept ±30V inputs. The drivers (T_1 & T_2), also called transmitters, convert the TTL/CMOS input level into RS232 level. The transmitters take input from controller's serial transmission pin and send the output to RS232's receiver. The receivers, on the other hand, take input from transmission pin of RS232 serial port and give serial output to microcontroller's receiver pin. MAX232 needs four external capacitors whose value ranges from 1µF to 22µF.

IV. CONCLUSION

The system capabilities to monitoring various type of hardware problem of computer. Fault diagnose on raspberry pi based Linux operating system of periodically embedded and monitoring system. The system capabilities to train new technician and computer user to monitoring without expert help.

REFERENCES

[1] Christopher J.M & Michael J.P. Tunning Numeric Parameter To Troubleshoot A Telephone-Network Loop. IEEEE Expert Intelligence System & Their Application, 1996.
[2] Louise T.M. & Robert M. Gas Turbine Condition Monitoring Using Qualitative Model-Based Diagnosis. IEEEE Expert Intelligence System & Their Application. 1997.
[3] M. Daud, PC Maintenance and Troubleshooting Expert System. Proc.Of Int. Conf.On Robotics, Vision And Parallel Processing For Automation.School of Elect.& Elec. Eng. USM.PP528-534, 1999.
[4] Jeffrey Dreibelbis, John Barth, Howard Kalter, and Rex Kho, "Processor-based built-in self-test for embedded DRAM," IEEE Journal of Solid-State Circuits, vol. 33, no. 11, November 1998, pp. 1731-1740.
[5] Y. Wang, 'The development and application of Build-In Test, "Aerodynamic Missile Journal, No.2, pp. 24-27, 2011.
[6] X. 1. Zhang, "On implementing BIT (built-in test) capability in airborne computer," Journal of North western Polytechnical University, Vol.21 No.5, pp. 576-581, Oct. 2003.
[7] S. De b, K. R. Pattipati, V. Raghavan, M. Shakeri, and R. Shrestha, "Multi-signal flow graphs: a novel approach for system testability analysis and fault diagnosis," Aerospace and Electronic Systems Magazine, IEEE, Vol.lO, No.5, pp. 14-25, 1995.
[8] H. J. Wang, H. Y. Wang, "Modelling and simulation of aircraft control logic based on state flow," Journal of Xi'an Technological University, Vo1.29, No.5, pp. 479-482, 2009.
[9] http://docs.oracle.com/cd/E20815_01/html/E20894/giznf.html#scrolltoc
[10] https://users.soe.ucsc.edu/~griss/agent-papers/ieee-autonomic.pdf
[11] https://tspace.library.utoronto.ca/bitstream/1807/24386/3/wang_yiqiao_201003_phd_thesis.pdf
[12] "Linux Fundamentals-Paul Cobbaut" lt-2.0 Publication date Mon 26 May 2014 01:00:19 AM CEST
[13] https://learn.adafruit.com/introducing-the-raspberry-pi-model-b-plusplus-differences-vs-model-b
[14] http://cnet2.cbsistatic.com/hub/i/r/2014/07/14/c2133bb2-c63d-4cc2-baa6 c5349452c6a2/resize/770x578/18e8be6c71c24b9b3d83d1dbe905d3a1/raspberry-pi-b plus3info.jpg
[15] http://en.wikipedia.org/wiki/MAX232
[16] http://www.chiark.greenend.org.uk/~sgtatham/putty/
[17] http://en.wikipedia.org/wiki/On-board_diagnostics

