A STUDY FOR ANALYZING THE EFFECT OF PROCESS PARAMETERS ON FORMABILITY IN THE INCREMENTAL SHEET FORMING

Jitender Sheoran[1], Ishu Monga[2]
Department of Mechanical Engineering, PPIMT, HISAR (INDIA)

Abstract: The formability of sheet metal appears better in incremental forming than in conventional forming. In this research paper the effect of various process parameters on formability has been studied. This study reveals about the effect that the incremental sheet forming has the potential to revolutionize sheet metal forming, making it accessible to all level of manufacturing.
Keywords: Incremental sheet forming, formability, process parameter, F.E.M

I. INTRODUCTION

Sheet metal forming is a major manufacturing process in many industrial sectors. Mostly in engineering field, parts are made of sheet metal particularly through conventional forming techniques such as deep drawing, stretch forming, shearing, blanking, bending etc. These forming processes need dedicated, highly specialized equipment such as forming presses, dies and punches, so these processes are expensive and time consuming in producing sheet metal parts. Moreover, small, medium volume production of precision conventional forming processes has still been a problem of the metal working industry. Incremental sheet forming (ISF) is a very promising technology to manufacture sheet metal products by the CNC controlled movement of a simple forming tool. Although it is a slow process, the cost reduction linked to the fact that punches or dies are avoided, makes it a very suitable process for low series production, in comparison with the traditional stamping or drawing processes. Nevertheless, the process still needs a further optimization to guarantee the reliability required for industrial applications. Process analysis based on experimental tests and modelling is required to analyze the effect of process parameters on the characteristics of incrementally formed parts and to go deeper in the understanding of the process itself. Therefore, obtaining experimental tests and a simple FEM model which gives accurate prediction of some characteristics of the formed parts becomes a necessity. The Incremental Sheet Forming process can be implemented rapidly and with a reasonable precision. Drawings from CAD (Computer Aided Design) are converted into CAM files (Computer Aided Manufacturing) containing the information of the three-dimensional path that should be developed by the tool in the process. Therefore, the tool path is totally controlled by the CAM program as in the usual Numerical Control technology. In this process, the total deformation is reached by the sum of the incremental steps with only small strains involved in each step. The strain in the blank can be reached in two different ways: the forming tool has a support below the sheet (Two-Point Incremental Forming - TPIF) or the forming tool has a single point (Single-Point Incremental Forming - SPIF), this means there is no support below the sheet. In the TPIF process, with a partial positive die as the support fixed below the blank convex surfaces can be produced, while in the SPIF concave surfaces are produced.

II. INCREMENTAL FORMING TECHNOLOGY

The ISF technology is a forming approach in which the numerically controlled (NC) technology is used to produce a part from the sheet materials. With this technology, the new product can be made in one day from CAD modelling to finished part. To response this task, a fully digital integrated system for SPIF process can be developed. The system can recognize automatically the features of CAD model of SPIF product. Then, it generates tool path based on machining data from the user or database of library. The key aspect of this system is a unique data flow used in the sub-module from CAD model to CNC code. All modules can be integrated fully on commercial CAD/CAM software called CATIA. It is very suitable for prototype process of new part and low-quantities production. The basic elements of ISF system are illustrated in Fig. 1 included CAD system (Computer Aided Design), CAPP system (Computer Aided Process Planning), CAA system (Computer Aided Analysis) and CNC machine (Computer Numerical Control).

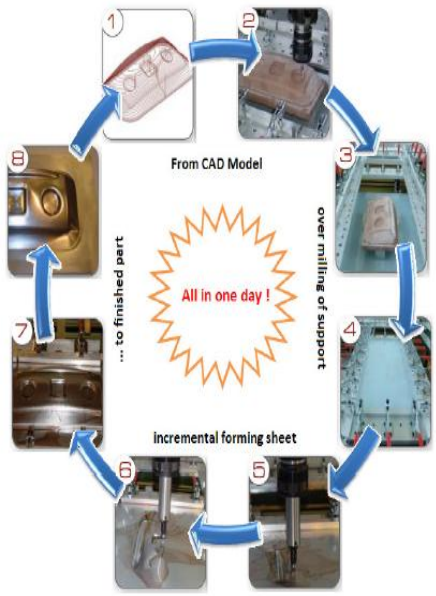

Fig.1. Steps of incremental forming process

However, the core aspect of this study is incremental forming technology for sheet materials. The ISF consists of a series of local forming operations leading to the final geometry of the part without the need for expensive tools or dies. The process involves the use of a single end-hemispherical tool to carry out progressively local deformation of sheet metal with three-axial CNC machine (or more axial CNC machine), or with an industrial robot. The movement of forming tool based on NC technology is generated from normal CAM system. The product of this process can be made directly from a 3-D CAD model to finished product without any dedicated dies or special tools. Therefore, the ISF process offers the rapid prototyping advantages of short lead times, high flexibility and lower cost for small batch applications. For complex product, a simple support is required to reinforce the stability of the system. The incremental sheet forming techniques (ISF) can be divided into two categories: two points incremental forming (TPIF) and single point incremental forming (SPIF), also known as negative and positive forming, respectively. The SPIF process (see Fig.2) is presented in the detail of section. In the TPIF process, the sheet metal moves vertically on bearings, which move on sheet holder posts, along the z-axis, as the forming tool pushes into the metal sheet.

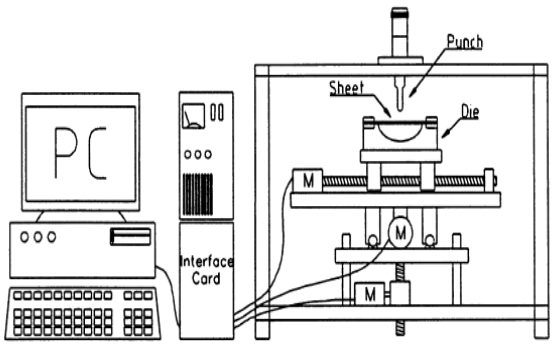

Fig.2 Schematic diagram of ISF system

This process is called TPIF because it has two contacting points between forming tool and the sheet. The first point where forming tool presses down on the sheet metal to cause locally plastic deformation. The second point is a contacting point between a static post and the sheet creating when the tool pressed into the sheet. Although TPIF process used a partial die, it is often called as die less forming.

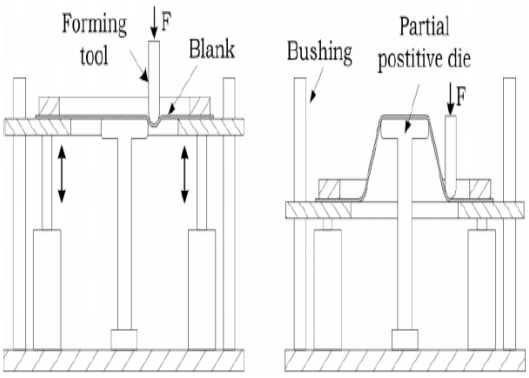

Fig.3 Two Points Incremental Forming

A. Two Points Incremental Forming: The TPIF process can be classified into two types: TPIF with a static support and TPIF with a kinematic support. For TPIF with a static support (see Fig.3), the support is positioned firmly on the opposite face of the sheet metal (opposite with contacting surface between tool and sheet). The sheet metal is clamped firmly on a frame that can move up and down in the parallel direction to the tool. For TPIF with a kinematic support, the support moves simultaneously with the forming tool. There are several configurations for this type in literature. In this configuration, the partial support is fixed on a rotating table which rotates simultaneously with forming tool. The rotating table holds a partial die that has a shape of final product.

B. Principle of SPIF:
The principle of incremental sheet forming can be explained on the fact that sheet or blank is clamped in blank holder with or without support. The formed tool draws a contour on horizontal plan, then make step downward and draw next contour and so until operation is completed for process. In this process deformation is reached by sum of incremental steps with only small strain involved in each step.

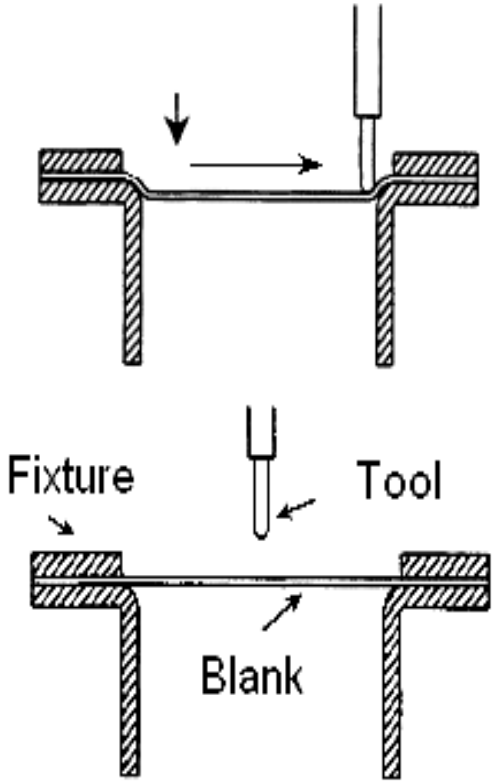

Fig 4- Principle of incremental sheet forming

C. Literature review:
Rattanachan.K [1] studied the effect of tool rotational speed and feed rate on formability of DIN1.0037 steel by using SPIF method. They found that tool rotational speed had more effect to formability by increasing tool rotational speed ,decreased formability by means of increased roughness and

wear of specimen .tool feed rate has little effect by on increased feed rate there by decreasing formability by lowering depth of specimen

Daniel Fritzen et al [2] presented on brass 70/30 and Incremental sheet forming process. They have presented the Experiment based on single Point incremental forming. They analyzed experimental work on material brass 70/30 by using CAD/CAM software, CNC machining centre with three axles, matrix incremental ,incremental forming tool and a device press sheets. They investigated the result of effect of parameter such as wall angle, step vertical, strategy of tool path. They found by practically that spiral strategy yielded a greater wall angle, compared to the conventional strategy outline

Miskolc M. Tisza [3] studied the effect of formability and accuracy in Incremental sheet forming by using same material grade (Al 1050) performed on Universal formability testing machine with the Vialux optical strain measurement device over conventional sheet forming. From this study they concluded that the formability in incremental forming is significantly increased with increased thickness as compared to incremental sheet forming. The result achieved are equally important both practically and theoretically aspect in sheet incremental forming.

S.Dejardin et al. [4] Studied on experimental investigation and numerical analysis for improving knowledge of incremental and sheet forming process for sheet metal parts. They investigated and demonstrating the capabilities of single point incremental forming to provide sheet metal components with accuracy they investigated the geometrical profiles of truncated cones resulting from the aluminium plate (AA1050) material through SPIF method and compare experimental results with the numerical result based on FE modal developed by studying ISF parameters including both material parameter (thickness, flow stress, hardening, friction) and process parameters (forming tool path or forming tool diameter) and then accurately predicted by spring back analysis of circumferential rings by focusing on the influence of formed tool path on resulting parts.

G Hussain et al. [5] has done an experiment analysis on a novel method to test the thinning limits of sheet metals in negative incremental forming. They investigated experimentally on sheet to test its thinning limits by forming axis symmetric part which can be modelled with a generatrix arc, was formed incrementally until it cracked. Based on these results, several axis-symmetric and asymmetric parts were formed at fixed slopes. From this study it can be concluded that a strategy to test the lowest possible thinning limits of sheet metals has been proposed .the proposed method is capable to test the thinning limits of sheet metals at reduced processing time and cost

Junchao Li et al. [6] studied on Numerical simulation and experimental investigation of incremental sheet forming with an elastic support. In this paper they investigate the influence of elastic support on spring back and formability of incremental forming was explored based on numerical simulation and experimental validation. They use three materials for elastic support is polyurethane, rubber, wood material. They found if same tool path is employed then more elastic support has large shape error and Effect of spring back compensation method based on tool path revision improve geometry accuracy.

I. Cerro et al. [7] has studied on theoretical and experimental analysis of die less incremental sheet forming process. They presented experiment on Al 1050 sheets on ANAK MATIC-7CNC milling machine. Equipped with AFanuc mod .2liMA numeric control. They used coordinate measuring machine for determining of geometrical accuracy and thickness measurements. They compared the experimental effect of process parameter (like advancing speed, force and forming strategy) on the characteristics of the parts (thickness, geometrical accuracy, roughness) produced by ISF with the FEM modelled which is obtained with ABAQUS/Explicit software. It can be concluded that effect of increase in forming force with advancing speed is that there is change in modulus and direction of forces involved, which may fracture due to undesirable thinning of the sheet.

Jeswiet et al. [8] has a complete summary of researches about the ISF technique until2004. After that time, researchers have been investigated deeply to mature this process in industrial applications. Therefore, this section will list some obtained results on Aspects of formability, numerical analysis, numerical simulation and failure prediction from 2004 up to now.

III. FORMING MACHINES

In general all CNC-controlled three-axis CNC machines are suitable to perform ASIF. High speeds, large working volumes and sufficient stiffness are favorable. Milling machines are available in different designs, which differ in working volume, maximum feed rate, maximum load, stiffness and cost prices. The following includes machines, which can be used for AISF. In most cases they can be used for other machining processes, hence they are multi-purpose. Only three-axis mills have been used to date.

A list of the types of machines available to do incremental forming is:

- CNC milling machines;
- Purpose built machines;
- Robots;
- Stewart platforms and Hexapods.

Common, applicable, shop, CNC milling machines that can be used are:

- Gantry milling machines; large working volume, high speed drives, high forces, expensive.
- Gateway milling machine; large working volume, high feed rates, high forces and stiffness, expensive.
- Bedplate type milling machines; large working volumes available, width is limited, low cost price, lower stiffness.
- Console milling machine; available in almost every workshop, low cost price, relatively small working volume.

This is the only type of three-axis CNC mill used to date.

IV. DESIGN OF EXPERIMENT

This work is a preliminary investigation of SPIF process applied to Al alloy. The most efficient way to investigate the influence of some variables on measurable outputs is by planning a DOE. The objective of this experimental strategy is to determine which forming parameters influence the formability of sheet and to understand the interacting effects. Based on the previous experimental fundamental of the SPIF process with sheet metals, the main parameters mainly affected on this process is chosen for investigation of DOE. The four forming parameters (factors) will be considered for the experiments with sheets:
(i)step size; (ii) tool size;
(iii) Feed rate; (iv) spindle speed.

V. CONCLUSIONS

From this study, we can conclude that the incremental sheet forming lead to higher material formability w.r.t conventional forming process. The effect of various parameters on the characteristics of the parts will be investigated and finally a simple FEM process model will be developed in order to predict the behaviour of the sheet during the process.

REFERENCES

[1] Junchao,Li, Tingtingbai, Zhiqiang Zhou,"Numerical simulation and experimental investigation of incremental sheet forming with an elastic support", Adv Manuf Technol 74:1649–1654, [2014]
[2] DanielFritzen,Anderson Daleffe,Jovani castellan and Lirio Schaeffer ,presented on "brass 70/30 and Incremental sheet forming process", Key engineering materials,pp1419-1431,[2013]
[3] M. Tisza, "New innovative forming processes", Proceedings of the 7th International Conference on Materials Science and Materials Processing, Balatonkenese, 2009, 131-138.
[4] Rattanachan ,"formability in SPIF forming of dome geometry",AIJSTPME,57-63 ,[2009]
[5] G Hussain ," an experiment analysis on a novel method to test the thinning limits of sheet metals in negative incremental forming ",International journal of machining tools &manufacture 47,419-435, [2007]
[6] G. Hussain, L.Gao," A comparative study on the forming limits of an aluminum sheet-metal in negative incremental forming". Journal of Materials Processing Technology, 94 – 98 ,[2007]
[7] I.Cerro,E.Maidagan,J.Arana,A.riveo,P.P.Rodriguez, "an study on theoretical and experimental analysis of die less incremental sheet forming", journal of materials processing technology 177 ,404-408, [2006]
[8] J.M. Allwood; N.E. Houghton; K.P. Jackson. "The Design of an incremental sheet forming machine." Advanced Materials Research, 471 – 478, [2005]

