SOLAR CAR

Prof. Vaishali Wadhe[1], Hemal Gohil[2], Chirag Dabgar[3], Kapil Jain[4], Pankajkumar Gautam[5]
Department of EXTC, K.J. Somaiya Institute of Engineering and Information Technology, Mumbai

ABSTRACT: Now-a-days, dealers of natural resources like fuel, coal etc. are facing a hard time to keep pace with the increasing demand. Therefore, to carry out this demand it is quite necessary to make a new exploration of natural resource of energy and power. Therefore sunlight is now-a-days considered to be a source of energy which is implemented in various day to day applications. Solar energy is being used to produce electricity through sunlight. With the help of this technology we aim to make solar energy powered car in our project. The main component to build a solar car is the solar panel. The solar cells collect a portion of the sun's energy and store it into the batteries of the solar car. Before that happens, power trackers converts the energy collected from the solar array to the proper system voltage, so that the batteries and the motor can use it. After the energy is stored in the batteries, it is available for use by the motor & motor controller to drive the car. We are going to use two set of batteries; one of which will get the electrical energy from the panel to drive the motor and another will be used as a back-up source of energy which will provide required power when there is no sunlight. A microcontroller can be used in this purpose which can switch to the fully recharged battery when it senses that another battery is empty or not providing enough power to drive the motor. Again, we used a complete circuitry to solve the problem of voltage fluctuation due to movement of the sun, earth or cloud etc. We used a voltage comparator, a relay circuit for and a transistor along with a diode for this purpose. Comparator compares the voltage of solar panel and the battery and then it provides the higher voltage to the transistor to activate the relay which provides the required and stable voltage to the car. However, after all these being proceeded, the motor controller adjusts the amount of energy that flows to the motor to correspond to the throttle. The motor uses that energy to drive the wheels. Preliminarily our objective would be to implement our idea on a remote control toy car and afterwards with help of this prototype we can extend our future work on building a actual car powered by the solar energy

I. ANALYSIS

A. Effect of Load (Weight) on the Toy Car

To successfully complete the whole project, initially we need to choose the proper solar panel with appropriate power rating and weight. Because, these things are directly related to the efficiency of the car. So, we did an experiment which involved the load management of the car while driving along with the V-I rating. Here, we chose a random car and put different bars with different weights on different position (i.e. front hood, roof top/ seat, back hood) of that car. Then we connected the multi-meter to the respective input pins ('+ve' and '-ve') of the battery of that particular car in parallel. Through this process we found out the voltage required to drive the motor of the car at different situation. Again, after that, we connected an ammeter with those respective in series to find out the current flow required to drive the motor of the car.

The result we found out for that random car is like this:

Wt. (gm)	s of car	V-I rating			
		At full speed		At less speed	
		V(v)	I(A)	V(v)	I(A)
200	Seat	8.21	7.63	6.08	5.41
	Back	8.27	7.60	6.73	5.29
	Front	8.23	7.52	6.58	5.28
400	Seat	8.20	7.38	5.43	4.85
	Back	7.77	6.76	4.87	3.86
	Front	7.49	6.68	4.46	3.37
600	Seat	7.51	6.66	4.30	2.89
	Back	7.49	6.60	4.12	2.77
	Front	7.30	6.50	3.96	2.65
800	Seat	7.30	6.28	3.73	2.48
	Back	7.15	6.38	3.70	2.49
	Front	7.30	6.44	3.76	2.45
1000	Seat	7.07	6.03	3.64	2.35
	Back	6.98	5.93	3.63	2.41
	Front	6.90	5.00	3.45	1.90

B. Choosing the Solar Panel

Since we got the idea about the solar panel we should collect, we spent no time to grab it from the store. In our case, we used a 3W solar panel to drive our handmade three wheeler toy car. We also measured the weight of the solar panel which was about 500gm. We ripped out border coating of the panel to further lessen the weight. This would give the three wheeler less load to take and move more freely

II. V - I CHARACTERISTIC

After collecting the solar panel it is important to measure the V-I rating of the panel for further implementation. So, we went outside in an open place under the sunlight at midday and did the job. We connected different loads with the panel to measure the voltage and current at different loads. But at first we found out the voltage and current at 'without any load' situation.

Load resistance,R(ohm)	Voltage V(volt)	Current I(mA)
0	0	170
1.2	0.19	167
7.2	1.18	164
10.5	1.7	162
18.8	3.01	159
30	4.71	157
35	5.39	154
45.2	6.81	150
50.1	6.83	136
122	15.02	122
335	18.76	56
964	19.28	20
3790	19.74	0

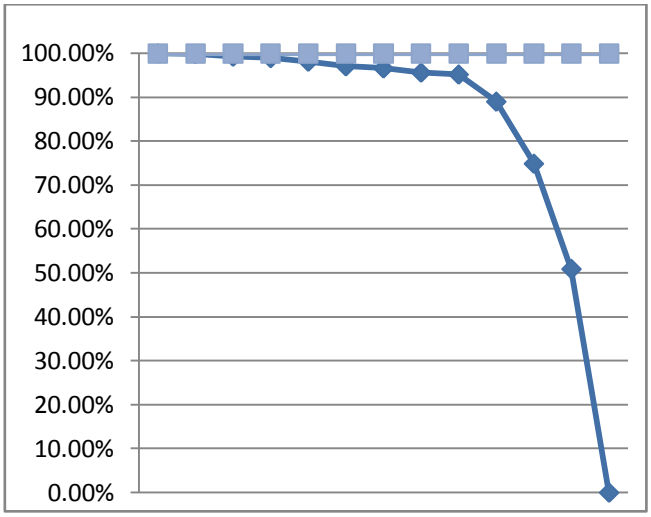

V-I curve

III. INITIAL CONCEPT

A. The Plan

In our project we are attempting to build a solar car that converts the sunlight into electrical energy. The main component to build a solar car is the solar panel. The solar cells collect a portion of the sun's energy so that power trackers can convert the energy collected from the solar array to the proper system voltage. After the energy is collected in the panel, it is available for use by the motor & motor controller (which was connected to the panel). After all these being proceeded, the motor controller adjusts the amount of energy that flows to the motor to correspond to the throttle. The motor uses that energy to drive the wheels.

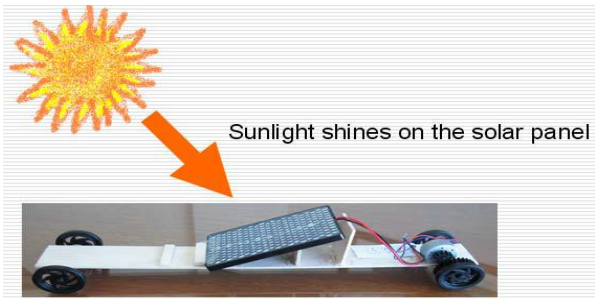

Components used

Components used	Range	Quantity
Batteries (heavy inverter batteries)	24V 190Ah	2*12V
Solar module	140Wp(watt peak)	1
Connecting cables	Motor connection high voltage cables Solar module to Charge controller unit -1Sq mm Charge controller to battery	10 meters 1 meter 1 meter
Motor	High torque DC motor	1

B. Circuit Description

Here, the solar panel and the rechargeable battery is connected in a parallel connection with a diode in between them. The diode is used so that whenever the battery is not over-charged. Again, these two sources are connected to the comparator so that the comparator can compare their voltages and provide a single higher output the circuit. Here, two 6V batteries needed to be used for biasing purpose. After that, comparator output is connected to the transistor to multiply the current to drive the relay circuit on. Now, getting the required energy, the relay turns on and does the switching operation according to the respective input. The 'common' pin of the relay circuit which is the output of the relay circuit is connected to the car's motor. As a result, the car is getting enough electrical energy to drive it's wheel and run along.

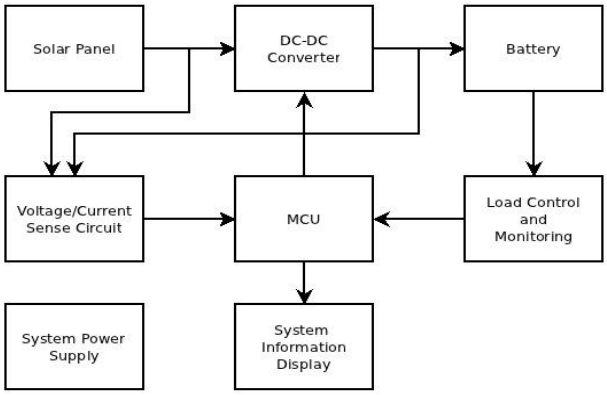

IV. CONCLUSION

- Best pollution free method
- Reduces dependency on fossil fules
- Solar car do have some disadvantages like
  1. Small speed range
  2. Initial cost is high
  3. Rate of conservation is not satisfactory (only 17%)
- Disadvantages can be overcome by future research
- Use of ultra efficient solar cells (30-35% efficiency)
- Solar automobiles have huge market perspective

REFERENCES

[1] cat.inist.fr/?aModele=afficheN&cpsidt=3154783
[2] www.need.org/needpdf/infobook_activities/Secinfo/SolarS.pdf
[3] www.pages.drexl.edu/~brooksdr/DRB_web
[4] http://en.wikipedia.org/wiki/Solar_energy
[5] http://www.elec.canterbury.ac.nz
[6] www.alldatasheet.com/datasheet-pdf/pdf/28817/TI/TL494D

