FINITE ELEMENT ANALYSIS OF FRAME OF HYDRAULICALLY OPERATED BEAM LIFTING MACHINE

Hemant Anand Kamble[1], S. B. Naik[2]
[1]Student, [2]Assistant Professor,
[1]M. E.–Mechanical (Design), [2]Mechanical Engineering Department,
Walchand Institute of Technology, Solapur, Maharashtra, India

***Abstract:** A special type of beam lifting device is designed for textile industries. The machine is hydraulically operated and is having two frames one horizontal and another vertical. Horizontal frame is mounted with two telescopic cylinders used for beam lifting to required height. The mobility for the structure is provided by using castor wheels. Finite element analysis of the frames is done by ANSYS software.*
***Keywords:** beam lifting device, telescopic cylinder*

I. HYDRAULICALLY OPERATED BEAM LIFTING DEVICE

Considering the need of the textile industries, a special purpose machine has been designed to lift the beams in textile industries. The finite element analysis of the frame of this machine is done to get the idea of the stresses & deformation of the structure in order to modify the same if needed.

II. GEOMETRY

For meshing of the model, 8 Node Brick 45 (SOLID45) elements are used. The mesh density was finalized using element size of 10 mm. The geometry of this element is as shown in the following fig.1. The tetrahedral option is used for this model. Solid 45 is used for the 3-D modeling of solid structures. The element is defined by eight nodes having three degrees of freedom at each node: translations in the nodal x, y, and z directions. The element has plasticity, creep, swelling, stress stiffening, large deflection, and large strain capabilities.

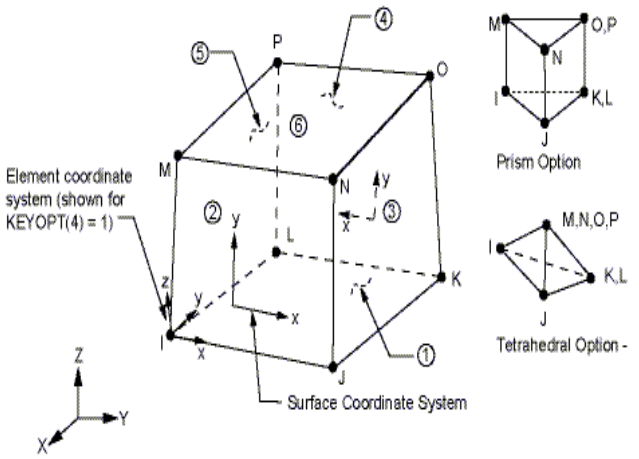

Figure 1 Geometry of SOLID45 element

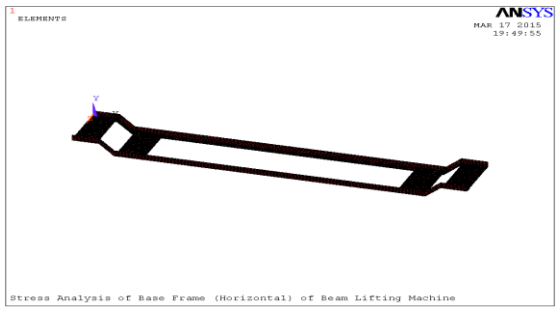

Fig. 2 Meshed model of horizontal frame of the machine

III. FINITE ELEMENT ANALYSIS OF HORIZONTAL FRAME OF THE MACHINE

Mesh density and type of element used in the analysis of the machine frame is decided by minimizing the error.

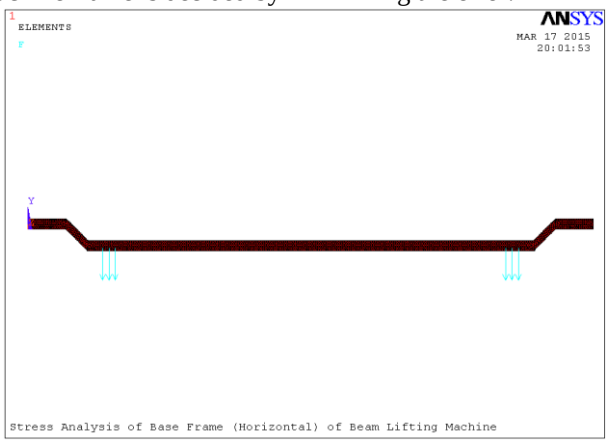

Fig. 3 Load applied at the plates

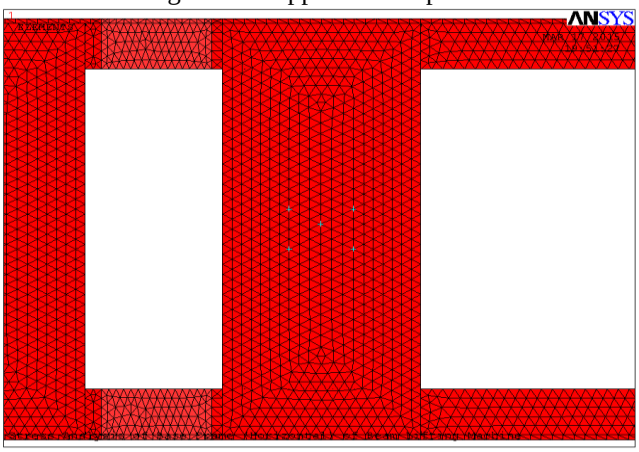

Fig. 4 Load points

A. Load condition

Considering the load to be lifted by each telescopic cylinder, weight of telescopic cylinder, hydraulic oil & other components, load on one cylinder mounting plate is nearly 2000 N. The same is applied on the plates at five nodes. Load at each node is 2000/5 = 400 N.

B. Boundary condition

The end plates of the frame are restricted in all directions.

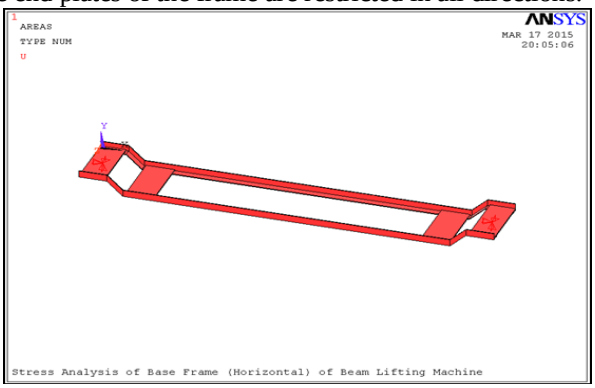

Fig. 5 Boundary conditions

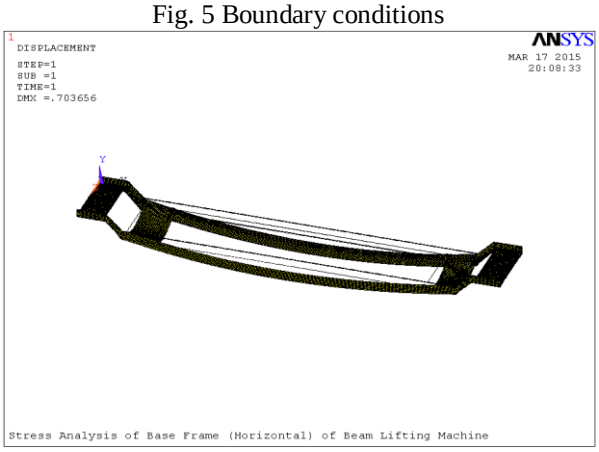

Fig. 6 Deformed shape with edge view of undeformed shape

C. Deformed shape

Above figure shows deformed shape of the horizontal frame. Here maximum deformation is 0.7 mm which is acceptable. As the middle part is unsupported, deflection is more at the centre. Maximum Von Mises stress is 78.095 MPa which is less than the allowable stress as shown in below fig.7

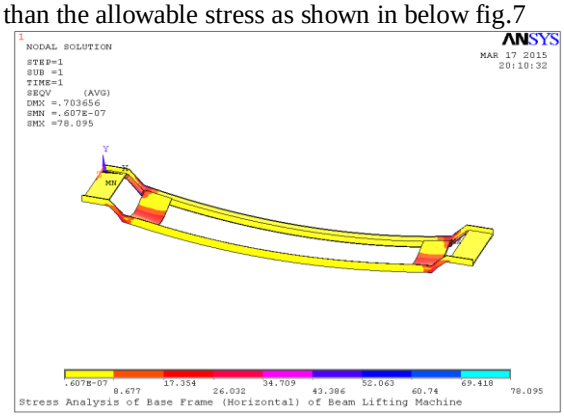

Fig. 7 Von Mises Stresses in the frame

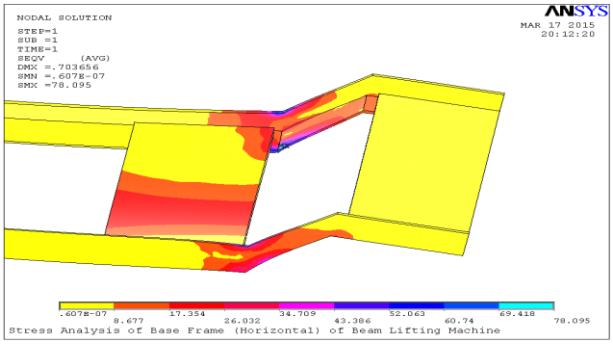

Fig. 8 Exaggerated view of part having maximum Von Mises Stresses

Above figure shows exaggerated view of the zone of maximum stress. Here stresses are maximum at the bent zone of the horizontal frame.

IV. FINITE ELEMENT ANALYSIS OF VERTICAL FRAME

After transferring the beam from warping machine to beam lifting machine, the machine is taken to the loom. During this transportation, as the distance or space between the wall & the machine is very less, the beam lifting machine is rotated through right angle & the beam now rests on the vertical frame. This vertical frame is also analyzed during this work. The element & mesh density are same as in the case of the horizontal frame. Following figure shows meshed model of the vertical frame with load condition & boundary condition. Here the whole load is applied on only one plate as the beam is resting on only one plate. The displacement of nodes on the lower side of the plate is restricted in all directions.

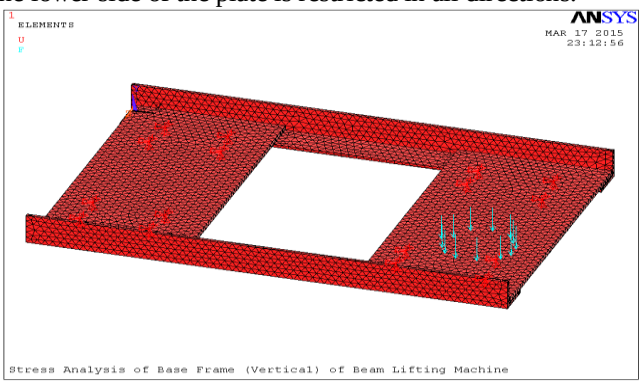

Fig. 9 Meshed model of vertical frame with load & boundary condition

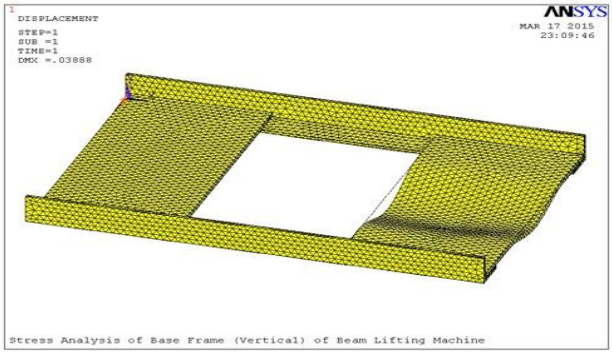

Fig. 10 Deformed shape of vertical frame

Figure 10 shows deformed shape. The maximum deformation is 0.03888 mm which is very less. Hence the designed frame is of sufficient strength. Figure 11 shows Von Mises stresses in the vertical frame. Here the stresses are very less. Hence the frame will have sufficient strength.

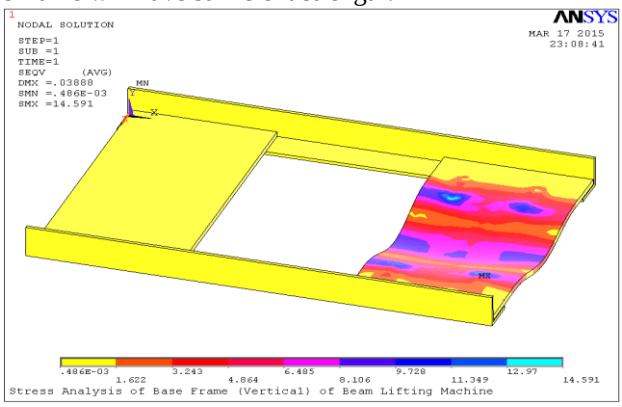

Fig. 11 Von Mises stresses in vertical frame

V. CONCLUSION

Analysis of horizontal & vertical frame of the beam lifting machine is done.

Following are the conclusions.

- The stresses & deformation of the horizontal frame are within limit.
- The maximum stresses occur at the bent section of the angle frame.
- The stresses & deformation of the vertical frame are within limit.
- The stresses & deformation of the vertical frame are lesser as compared to those in vertical frame. This is due to more unsupported part of the horizontal frame.
- Hence the designed vertical and horizontal frame for beam lifting machine is found best suitable.

REFERENCES

[1] Anand Aggarwal , Design Modification & Analysis for Suspension Frame Using Finite Element Analysis, International Journal of Engineering Research and Applications (IJERA), Vol. 2, Issue6, November- December 2012, pp.1317-1322

[2] Bhavesh N. Khichadia, Dipeshkumar M. Chauhan (2014) A Review on Design and Analysis of Mechanical Press, International Journal of Advance Engineer ing and Research Development (IJAERD) Volume 1,Issue 6,June 2014

[3] A. G. Naik, N. K. Mandavgade, "FEA Implementation In Analysis And Optimization Of Top And Bottom Frame For Hydraulic Cotton Lint Bailing Press", International Journal of Scientific & Engineering Research Volume 3, Issue 7, July-2012

[4] ANSYS User manual

