OPTIMIZATION OF SEQUENTIAL DAMPING IN SEMI-ACTIVE SUSPENSIONS WITH MAGNETO-RHEOLOGICAL FLUID TO CONTROL OF VIBRATIONS AND ACOUSTICS

Sourabh Joshi[1], Piyush Nandwal[2]
[1]Acropolis Technical Campus, Indore (M.P.)

Abstract: In the case of semi-active suspensions with sequential damping, the damping forces are zero or rather very small as long as the sprung mass is moving away from its static equilibrium position and suddenly increases when the system is returning to the static equilibrium position. The basic idea of this semi-active control strategy is to balance the elastic force by the damping force in order to reduce or even to cancel the forces transmitted through the suspension as long as the spring and elastic forces act in opposite direction. Semi-active suspension system significantly improves the ride comfort, road holding and reduces the noise and harshness. Most suspensions have passive springs and dampers with rather limited vibration isolation performance, both for linear and nonlinear restoring or damping characteristics. By using hydraulic or pneumatic power supply and servo actuators controlled by feedback signals, it is possible to produce active suspensions, which are superior to any passive system throughout the frequency range. But they are more complex, more expensive and less reliable than the passive suspensions. A compromise between passive and active types is semi-active suspension systems consisting of an active damper in parallel with a passive spring. Semi-active control systems combine the best features of the passive and active ones. They have almost the same environmental robustness, mechanical simplicity and low cost as passive devices and can offer the adaptability of active control systems without requiring the associated large power sources. In this paper the effect of semi-active suspension with Magneto-rheological fluid to control the damping characteristic of the system and balanced logic on which the system works is presented. The damping characteristics are controlled by modulation of fluid-flow orifices, dry friction forces, electric or magnetic field applied to electro rheological or magneto rheological fluid dampers. The balance logic is assumed to be achieved with a variable dry friction damper controlled by the modulation of the normal force applied on the friction plates. For the models with semi-active dual-rate dampers, the value of the equivalent suspension damping coefficient is a function of the relative velocity of the sprung mass with respect to the wheel subsystem.

Key Words: Transmissibility factor, Magneto-rheological fluid, Sequential damping

I. INTRODUCTION

Isolation of passenger from induced shock and vibration is the important task of the suspension of any ground vehicle. Most suspensions have passive springs and dampers with rather limited vibration isolation performance, both for linear and nonlinear restoring or damping characteristics. Their transmissibility factors show that low damping gives good isolation at high frequency but poor resonance characteristics, whilst higher damping results in good resonance isolation at the expense of high frequency performance. Single degree of freedom (SDOF) or two-degrees-of-freedom quarter-car models, subjected to road excitation, are commonly employed in many areas of the automotive industry. These areas include the prediction of dynamic response, identification, optimization and control of ground vehicles. This is mostly due to the simplicity of the quarter-car models and the qualitatively correct information they provide, especially for ride and handling studies. Also, information extracted from such simple models provides quite frequently a firm basis for more exhaustive, accurate, and comprehensive studies with more involved dynamical car models The main objective of the present study is to develop and apply a systematic methodology leading to optimum combinations of the suspension damping and stiffness parameters of a ground vehicle subjected to random road excitation. Most of the previous studies on the subject have dealt with car models possessing linear characteristics or mechanical models subjected to deterministic road excitation. In the case of semi-active suspensions with sequential damping [1], [2], the damper force is zero or rather very small as long as the sprung mass is moving away from its static equilibrium position, suddenly increases when the system is returning to the static equilibrium position. The basic idea of this semi-active control strategy is to balance the elastic force by the damping force in order to reduce or even to cancel the forces transmitted through the suspension as long as the spring and elastic forces act in opposite direction (semi-active control strategy based on balance logic). In this paper the balance logic is assumed to be achieved with a variable dry friction damper controlled by the modulation of the normal force applied on the friction plates [3].The comfort improvement achieved by using this semi-active control strategy (measured in terms of the r.m.s. vehicle body acceleration), is compared with those provided by the optimum passive linear and quadratic damping. The basic ideas of the optimisation problem in this paper are as follows. Road roughness becomes a source of vibrations and effects on the Dynamic Loads (DLs) of the individual wheels. Since the profile of a road is random in nature, so are the vibrations and DLs. The ride comfort and road holding of a vehicle can be described in Root Mean Squares (RMS)

values of the vertical accelerations of the sprung and the unsprung masses, respectively, and the DLs, in which the accelerations of the sprung and unsprung masses must be minimized. Also, the suspension must operate without hitting the bumper stops (i.e. oscillates within the rattle-space)[5]. The DLs between the tyres and the road surface must be kept low for good directional control during the cornering of a vehicle at high speed. Therefore, the semi-active suspension needs to be able to provide damping coefficients that will meet such constraints [6]. Compared with the various optimization techniques in the literatures, the optimization technique proposed in this paper addresses issues related to the frequency ranges and the types of roads. The dynamic responses of the vehicle model, which are functions of damping coefficients, excitation frequency, and road roughness, are derived. Sprung-mass acceleration and DLs are parameters used to evaluate the performances of ride comfort, road holding, and noise and harshness. This study aims to find the optimal damping coefficients that give the minimum values of the sprung-mass accelerations and the DLs under the constraints of maximum and minimum damping forces, rattle space, and tyre deflection. Using a sequential quadratic programming method based on the derivation of simultaneous nonlinear equations, the optimal damping coefficients with respect to the excitation frequency ranges (i.e., body motion 0 – 4 Hz, ride comfort 4 – 8 Hz, road holding 8 – 12 Hz, and noise and harshness 12 Hz and higher) and the various types of roads (i.e., asphalt, concrete, and rough) are optimized.

II. OBJECTIVES AND METHODOLOGIES

Semi-active suspension systems have shown a significant improvement over the passive systems. Due to this fact, semi-active dampers have been designed and made commercially available; the control strategies have been adopted and implemented to offer superior ride quality to passenger vehicles. However, the technology is still an emerging one, and elaboration and more research work on different theoretical and practical aspects are required [7]. This paper is an attempt to develop an understanding of some of those aspects, such as the effect of the semi-active dampers response-time on the performance of the control strategies through analytical and numerical methods. On the other hand, the technology has not yet been adopted for heavy vehicles. This attributes to three reasons: first, the un-availability of semi-active actuators (dampers) suitable for peculiar requirements of the heavy and off-road vehicles; second, lack of interest in the manufacturing sector, given that the superior advantages of such systems, 24 for an armored vehicle for instance, are yet to be demonstrated; and third, the possible economical impacts of such systems[8]. In recent years, research work on improving the semi-active control systems has advanced in four major directions:

- Development of high-performance and low-cost semi-active actuators
- Achieving higher-performance semi-active control methods and algorithms while maintaining the simplicity and cost efficiency of those systems
- Improving the sensing system through the use of integrated sensory structures
- Manufacturing of a high-speed, high-performance, low-cost micro controller
- The focus of this thesis is on the first two of these directions.

In this paper exploring an new technology, a cost-effective semi-active damper that can withstand the punishing, wide-ranging requirements of heavy vehicles is designed, developed, and tested, for the proof of concept. New and innovative damper modeling methods are proposed. Given the data obtained from an armored vehicle – a GPV in fact – the proper control strategies have been developed, and the technical advantages of the technology compared with the passive system have been illustrated. Different aspects of the semi-active controlled systems, such as response-time and frequency-dependent damping, have been analyzed and investigated through analytical methods and numerical studies. Through extensive analytical methods, numerical simulations, and real-time experiments, new control strategies have been proposed, while the simplicity of the conventional control systems has not been altered. To achieve the research objectives, this thesis makes effective use of different analysis methods, including the nonlinear perturbation techniques, such as method of averaging; numerical studies and simulation processes; and real-time tests and experiments where applicable.

III. MODIFIED SKYHOOK CONTROL

The Skyhook control is an effective vibration control strategy because it dissipates the system's energy at a high rate. In semi-active suspensions, the conventional suspension-spring is kept, but the damper with a fixed orifice is replaced with a controllable one. The controllable damper offers a wide range of damping forces because it can change its damping characteristics either by changing the size of an orifice (i.e., a continuously variable orifice damper) or by adjusting the viscosity of the fluid passing through an orifice (i.e., a Magneto-Rheological (MR) damper). In this paper, an MR damper is used. This class of dampers provides fast, smooth and continuously varying damping forces with low power consumption. An MR damper consists of a hydraulic cylinder containing a fluid, which is composed of micron-sized magnetically Polaris able particles dispersed in a carrier medium such as water or synthetic oil. The presence of a magnetic field causes the fluid particles to align and oppose themselves to the fluid movement, and such behaviors, therefore, results in the increase of the damping coefficient.. Furthermore, whereas an active suspension system requires an external power source to energize an actuator that controls the vehicle, a semi-active system uses external power only in adjusting the damping levels and in operating the embedded controller and a set of sensors. The controller determines the level of damping based on the control strategy and then automatically adjusts the damper to achieve that damping level. The most common type of semi-active control policy is the modified skyhook control, which includes a skyhook damper with coefficient c2 connected to

the inertial frame and a variable damper with coefficient c1. Figure1, which depicts an equivalent model of Figure 2, shows a variable coefficient μ., Zs, Zu, and Zr are the vertical displacements of the sprung-mass, the unsprung-mass, and the road profile, respectively; dZs/dt and dZs/dt − dZu/dt are the absolute and the relative velocities, respectively. Ms is the quarter-car body mass (sprung-mass); Mu is the unsprung-mass that represents the mass of the wheel, tire, brake, and suspension linkages. k and kt are the spring coefficients of the suspension-spring and the tire. For suspension systems, two mean square indices have to be taken into account. The first is related to the comfort of the passengers, and this mean square index depends on the acceleration of the sprung-mass; the second is related to the road holding, and this mean square index depends on the DLs or vertical fluctuations of the wheels. A compromise between these two indices has to be found using only one coefficient, which is μ, as shown in Figure 1. The passive suspension system does not offer a solution to this trade-off, since the two conflicting conditions are independent of each other. On a conceptual basis, this trade-off problem can be solved by increasing the number of parameters available, that is, by making the damping force depend on more than one parameter. This is possible if the skyhook damping strategy is adopted, because it imposes not only a force proportional to the relative velocity between the sprung and the unsprung masses, but also a force proportional to the absolute velocity of the sprung-mass itself.

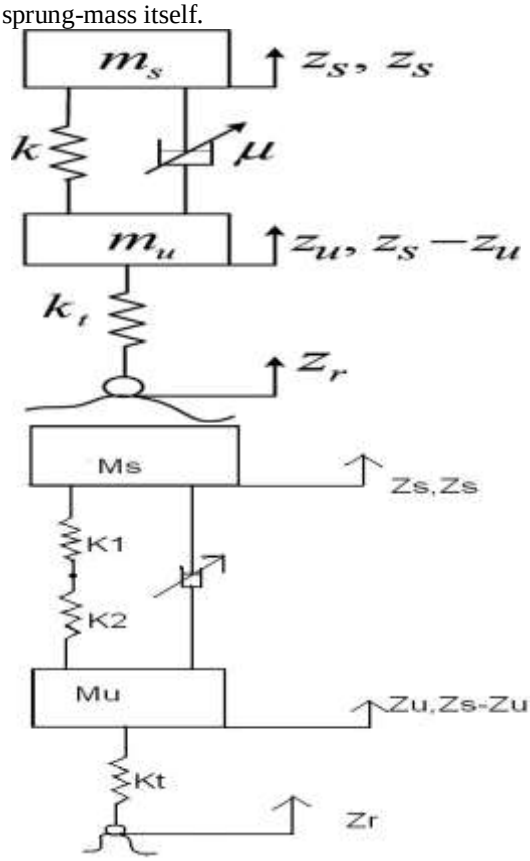

Figure1 Quarter-car models: (1) An equivalent model of the modified skyhook control; (2) A proposed modified model under study

The basic composition & the density of the four commercial MR fluids are:

Commercial MR fluid	Percent iron by volume	Carrier fluid	Density (g/ml)	Temperature range	Initial settling rate(%/day)
	26	Hydrocarb on oil	2.66	-40oC to 150 oC	1.0
MRX-140ND	40	Hydrocarb on oil	3.64	-40oC to150 oC	0.3
MRX-242AS	42	water	3.88	5oC to90 oC	0.2
MRX-336AG	36	Silicon oil	3.47	-50oC to200 oC	0.0 (non-detechable)

Sheer stress in MR fluid as the function of flux density at a maximum shear rate of 26s-1

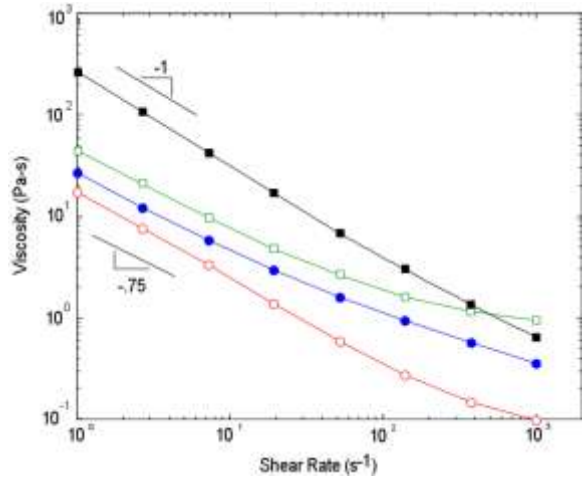

Figure 3 Viscosity as a function of shear rate at 25°C for MRX-126PD (✿), MRX-242AS (●), MRX-140ND (□), and MRX-336AG (■).

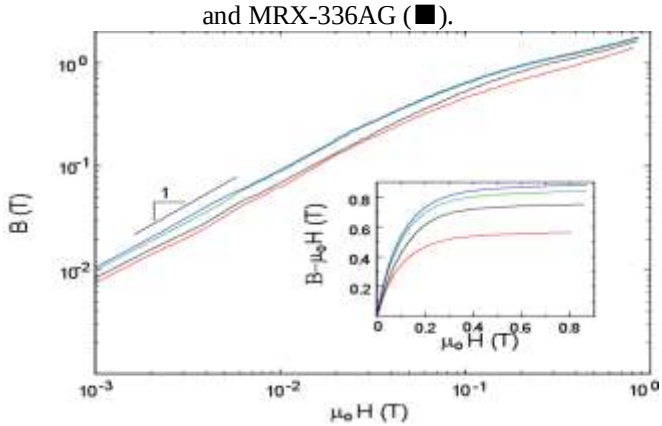

The paper suggests that the skyhook can be improved & the damping parameters & vibration can be controlled by using two springs instead of one single spring in parallel to the dampers. The unbalance due to the springs (K1, K2) will occur at the node which is the mean or the centre point of the two springs if though so the unbalance due to the spring can be minimized & reduced with parallel damper which is using MR fluid, thus the viscosity is more & the vibration due to rode, tire & suspension system would be minimized then that of single spring system in which the direct load transfer occur to the main system which could be in form of vibration. The paper talks about sequential damping phenomenon which analytically reduces the vibration & jurks.

The equation of motion of the sprung-mass is given as follows.

Ms(d2Zs/dt2) + μ{(dZs/dt) –(dZu/dt)} + k(Zs-Zu) = 0 ; from Figure 1

Ms(d2Zs/dt2) + μ{(dZs/dt) –(dZu/dt)} + (k1+k2)(Zs-Zu) = 0 ; from Figure 2

Where μ = μ (c1, c2) is the design parameter.

c1, c2 are the damping parameters depend on the fluid properties & viscosity. The equation of motion of the unsprung-mass, MR fluid is a non-Newtonian fluid that changes its properties in the presence of a magnetic field. Micron-size iron particles suspended in a carrier fluid (water, petroleum-based oil, or silicon-based oil) align in chain-like structures along the flux lines of a magnetic field, changing the rheological properties of the fluid (Figure 7). Dampers using magneto rheological fluid as the working fluid are disclosed in various U.S. patents, including patent Nos. 5,277,281 (Carlson et al., 1992) and 6,131,709 (Jolly et al., 2000). These devices use an electromagnetic coil in close proximity to the magneto rheological fluid flow to create a damping force that is adjustable by the current applied to the coil. Although MR devices are available in different forms and for different applications, their working principle is classified in three categories: flow mode, shear mode, and squeeze mode (Jolly et al., 1999). Figure 8 shows and simplifies all three working modes. Many research studies have been performed to model the properties of the MR fluids and dampers. A recent and well-received model is that developed by Spencer (1997); this model has used the Bouc-Wen model to analyze the nonlinear hysteresis behavior of an MR damper. The focus of this thesis, in general, is the application of the MR fluids, not the modeling of those systems.

IV. MECHANICAL MODELS

The mechanical models of the vehicle systems examined in the present study are shown in Figure 1. They are known as quarter-car models and they are widely used in automotive engineering due to their simplicity and the qualitatively correct information they provide, at least in the initial design stages (Hrovat, 1993). In all cases, the coordinates $x1$ and $x2$ represent the absolute vertical displacement of the wheel subsystem and the vehicle body, respectively. First, for the linear model of Figure 1(a), the equations of motion can easily be put in the classical matrix form

$M(d^2x/dt^2) + C(x, dx/dt) + Kx = f(t)$

Where $x(t)= (x1, x2)^T$ represents the response vector, while the quantities. the vector $f(t)$ includes the forcing terms, arising from the road roughness. In particular, the vehicle is assumed to travel with a constant horizontal velocity v_0 over a road with a profile $s(z)$. Here, this profile is represented by a random process with a statistical distribution, which is consistent with measurements of typical road profiles (Dodds and Robson, 1973). Therefore, the forcing vector is expressed in the form

REFERENCES

[1] FEDERSPIEL, J.M., Quelques aspects modernes de problemes de dynamique automobile, Ingenieurs de l'Automobile 5, 1976, 133-140.
[2] SIRETEANU, T., The effect of sequential damping on ride comfort improuvement, Vehicle Noise and Vibration, Institute of Mechanical Engineers Conference Publications, 1984, 77-82.
[3] STAMMERS, C.W., SIRETEANU, T., Vibration control of machines by use of semi-active dry friction damping, Journal of Sound and Vibration 209, 4, 1998, 671-684
[4] SIRETEANU, T., GUNDISCH, O., PARAIAN, S., Vibratiile aleatoare ale automobilelor, Editura Tehnica 1981
[5] SOONG, T.T., Random Differential Equations in Science and Engineering, Academic Press, New York, 1975.
[6] BENDAT, J.S., PIERSOL, A.G., Engineering Applications of Correlation and Spectral Analysis, John Wiley & Sons, New York, 1980.
[7] DINCA, F., TEODOSIU, C., Nonlinear and Random Vibration, Academic Press, Inc., New York, London, 1973.
[8] Lall AK, Asnani NT, Nakra BC. Damping analysis of partially covered sandwich beams. J Sound Vib 1988; 123:247–59.

